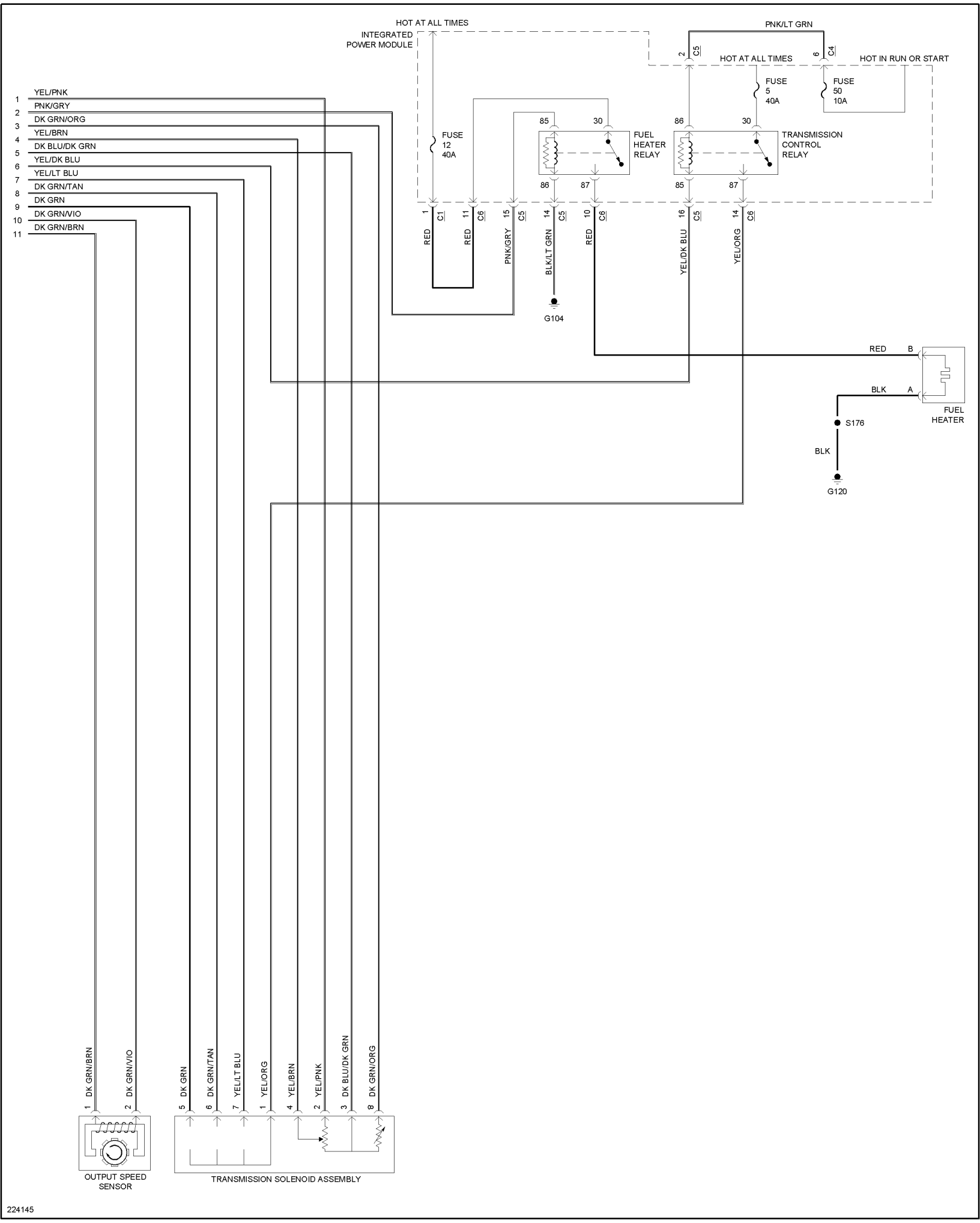
HOT AT ALL TIMES
INTEGRATED POWER MODULE
PNK/LT GRN
HOT AT ALL TIMES
HOT IN RUN OR START
FUSE 5 40A
FUSE 50 10A
FUSE 12 40A
FUEL HEATER RELAY
TRANSMISSION CONTROL RELAY
YEL/PNK
PNK/GRY
DK GRN/ORG
YEL/BRN
DK BLU/DK GRN
YEL/DK BLU
YEL/LT BLU
DK GRN/TAN
DK GRN
DK GRN/VIO
DK GRN/BRN
RED
PNK/GRY
BLK/LT GRN
YEL/DK BLU
YEL/ORG
G104
FUEL HEATER
S176
G120
OUTPUT SPEED SENSOR
TRANSMISSION SOLENOID ASSEMBLY
224145