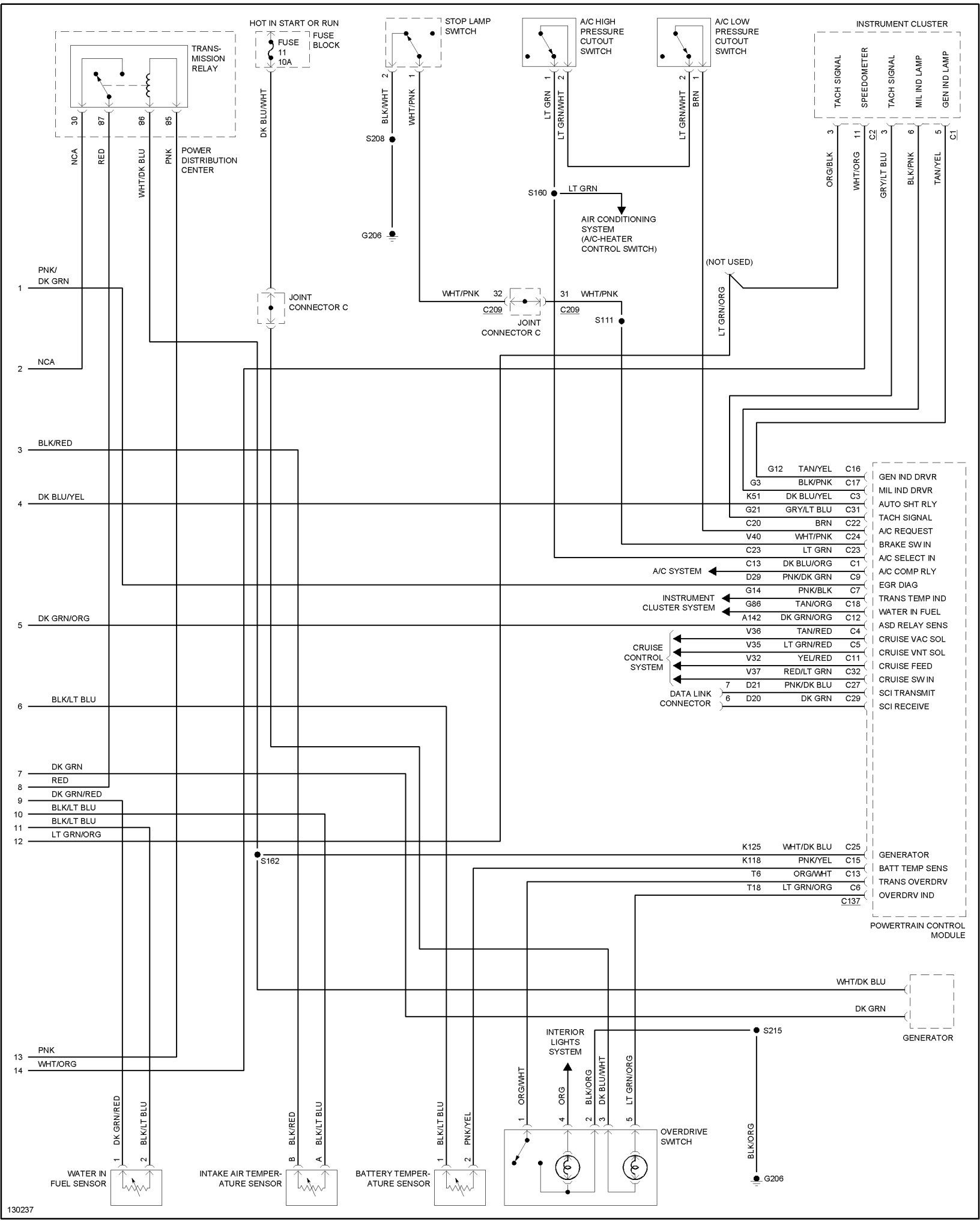
TRANS-MISSION RELAY
30
87
86
85
NCA
RED
WHT/DK BLU
PNK
POWER DISTRIBUTION CENTER
HOT IN START OR RUN
FUSE 11 10A
FUSE BLOCK
DK BLU/WHT
STOP LAMP SWITCH
BLK/WHT
WHT/PNK
S208
G206
A/C HIGH PRESSURE CUTOUT SWITCH
LT GRN
LT GRN/WHT
S160
LT GRN
AIR CONDITIONING SYSTEM (A/C-HEATER CONTROL SWITCH)
A/C LOW PRESSURE CUTOUT SWITCH
LT GRN/WHT
BRN
INSTRUMENT CLUSTER
TACH SIGNAL
SPEEDOMETER
TACH SIGNAL
MIL IND LAMP
GEN IND LAMP
C2
C1
ORG/BLK
WHT/ORG
GRY/LT BLU
BLK/PNK
TAN/YEL
(NOT USED)
LT GRN/ORG
PNK/DK GRN
NCA
BLK/RED
DK BLU/YEL
DK GRN/ORG
BLK/LT BLU
DK GRN
RED
DK GRN/RED
BLK/LT BLU
BLK/LT BLU
LT GRN/ORG
JOINT CONNECTOR C
WHT/PNK
32
C209
31
WHT/PNK
C209
JOINT CONNECTOR C
S111
G12 TAN/YEL C16 GEN IND DRVR
G3 BLK/PNK C17 MIL IND DRVR
K51 DK BLU/YEL C3 AUTO SHT RLY
G21 GRY/LT BLU C31 TACH SIGNAL
C20 BRN C22 A/C REQUEST
V40 WHT/PNK C24 BRAKE SW IN
C23 LT GRN C23 A/C SELECT IN
C13 DK BLU/ORG C1 A/C COMP RLY
A/C SYSTEM
D29 PNK/DK GRN C9 EGR DIAG
G14 PNK/BLK C7 TRANS TEMP IND
INSTRUMENT CLUSTER SYSTEM
G86 TAN/ORG C18 WATER IN FUEL
A142 DK GRN/ORG C12 ASD RELAY SENS
V36 TAN/RED C4 CRUISE VAC SOL
CRUISE CONTROL SYSTEM
V35 LT GRN/RED C5 CRUISE VNT SOL
V32 YEL/RED C11 CRUISE FEED
V37 RED/LT GRN C32 CRUISE SW IN
7 D21 PNK/DK BLU C27 SCI TRANSMIT
DATA LINK CONNECTOR
6 D20 DK GRN C29 SCI RECEIVE
K125 WHT/DK BLU C25 GENERATOR
K118 PNK/YEL C15 BATT TEMP SENS
T6 ORG/WHT C13 TRANS OVERDRV
T18 LT GRN/ORG C6 OVERDRV IND
C137
POWERTRAIN CONTROL MODULE
S162
WHT/DK BLU
DK GRN
GENERATOR
S215
INTERIOR LIGHTS SYSTEM
PNK
WHT/ORG
DK GRN/RED
BLK/LT BLU
BLK/RED
BLK/LT BLU
BLK/LT BLU
PNK/YEL
ORG/WHT
ORG
BLK/ORG
DK BLU/WHT
LT GRN/ORG
OVERDRIVE SWITCH
BLK/ORG
G206
WATER IN FUEL SENSOR
INTAKE AIR TEMPER-ATURE SENSOR
BATTERY TEMPER-ATURE SENSOR
130237